INKJET PRINT AUSTRALIA

MTI SERIES
More Than Ink

END-OF-LINE PACKAGING · CARTON LABELLING

IJP-MTI ST-100

SWING TAMP LABELLER
WITH MOTORISED ROLLER CONVEYOR

TTO CONFIGURATION SHOWN



ST-100T with thermal transfer printer, vertical label feed. ANSER A1 version: see overleaf.

Labels the end of every carton as it passes on the motorised roller conveyor. The swing arm tamps each label firmly into place.

Swing tamp
end-of-carton application

50–180 mm
label height range

48.7 mm
max print height with ANSER A1

No ribbon
A1 prints with ink cartridges

PRINT ON THE LABEL



With the ANSER A1 the label runs horizontally past the printer, so batch, date and barcode are printed on every label just before it is applied. No ribbon, no pre-printed stock.

ERECT. PACK. TAPE. LABEL.

ONE SUPPLIER, CARTON TO CODE

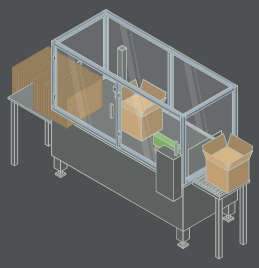

01 · ERECT
IJP-MTI CE-600 carton erector

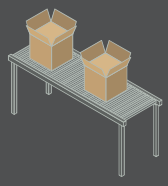

02 · PACK
Gravity roller packing conveyor

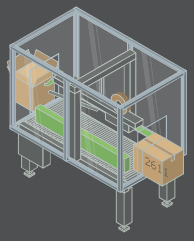

03 · FOLD & TAPE
IJP-MTI FT-500 guarded top taper



04 · LABEL & CODE
IJP-MTI ST-100A with ANSER A1

MORE THAN INK

02 9427 3270 sales@inkjetprint.com.au inkjetprint.com.au

PRINT ON THE LABEL

HORIZONTAL LABEL FEED WITH ANSER A1

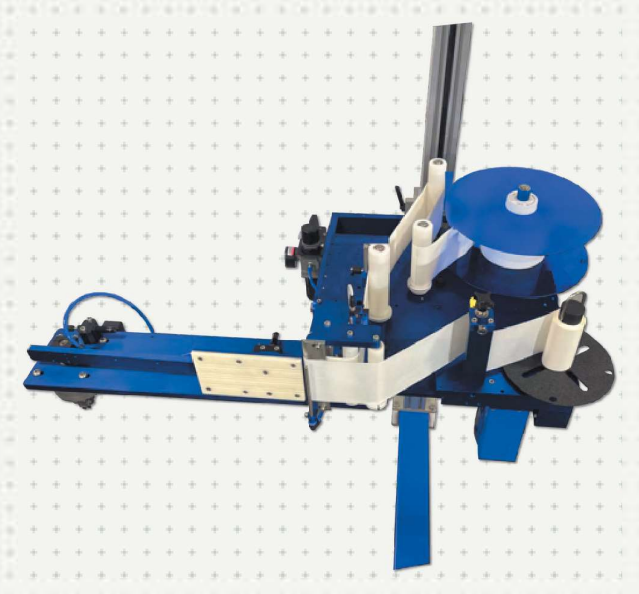

ST-100A applicator head with horizontal label feed. A1 printer not shown.

- **Horizontal label web —** reel mounted flat, label runs past the A1 printer.
- **ANSER A1 on the label path —** batch, date and barcode printed on each label before it is applied.
- **Swing tamp arm —** swings the label out and tamps it onto the end of the carton.
- **Height-adjustable column** — crank sets the head to carton height, on a castor base.
- **Labels 50–180 mm high—** a longer label gives the A1 more room for codes.

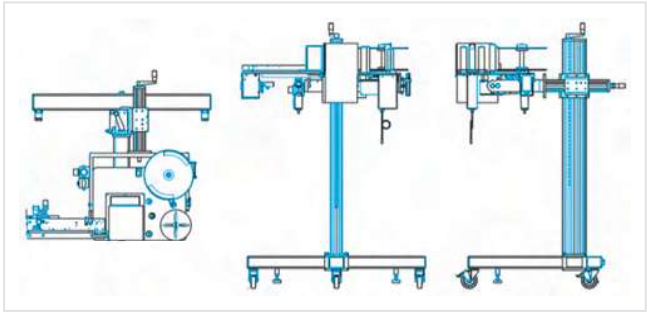

Plan, front and side views. Indicative only.

CONFIGURATIONS

	ST-100A	ST-100T
LABEL FEED	**Horizontal**	Vertical
PRINTER	ANSER A1 thermal inkjet	Thermal transfer (TTO)
CONSUMABLES	Ink cartridge only	Ribbon
PRINT HEIGHT	Up to 48.7 mm (2 × 1" heads)	To suit TTO printer
SHOWN	Head photo, this page	Photo, front page

SPECIFICATIONS

APPLICATION	End of carton, swing arm tamp
LABEL HEIGHT	50–180 mm
SPEED	Matched to carton erector / top taper output, set by conveyor speed and carton spacing
CONVEYOR	Motorised rollers, adjustable side guide
MOUNTING	Front or back side of the conveyor
STAND	Height-adjustable column, castors & levelling feet
ELECTRICAL	Single phase 240 V
AIR SUPPLY	0.4–0.6 MPa



EXAMPLE SOLUTION

ANSER A1 label printer

- Thermal inkjet, HP & IUT cartridges
- 12.7 or 25.4 mm per head, up to 48.7 mm with two 1" heads
- Up to 600 dpi
- Text, dates, counters, logos, 1D/2D barcodes, QR, DataMatrix, GS1
- 5" colour touchscreen
- Maintenance-free, 7-year warranty

COMPLETE THE LINE

ONE SUPPLIER, CARTON TO CODE

Place it after the IJP-MTI FT-500 guarded top taper, fed by the IJP-MTI CE-600 carton erector and a gravity roller packing conveyor. Supplied, installed and commissioned by INKJETPRINT, Lane Cove West, Sydney.

INKJETPRINT Pty Ltd
Factory 7, 27 Mars Road
Lane Cove West NSW 2066
02 9427 3270 · sales@inkjetprint.com.au
Robin Lionstone · 0402 028 140
inkjetprint.com.au

ANSER Since 1986 AUTHORISED DISTRIBUTOR